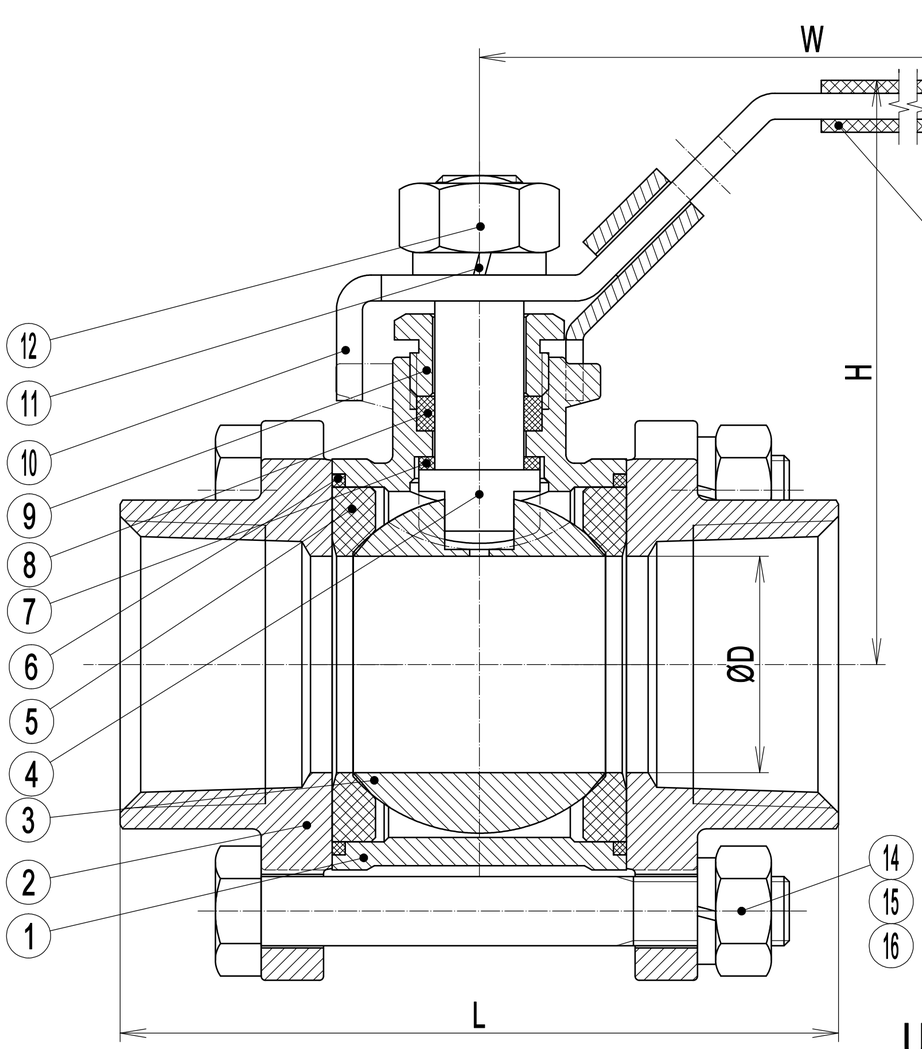

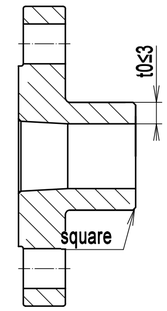

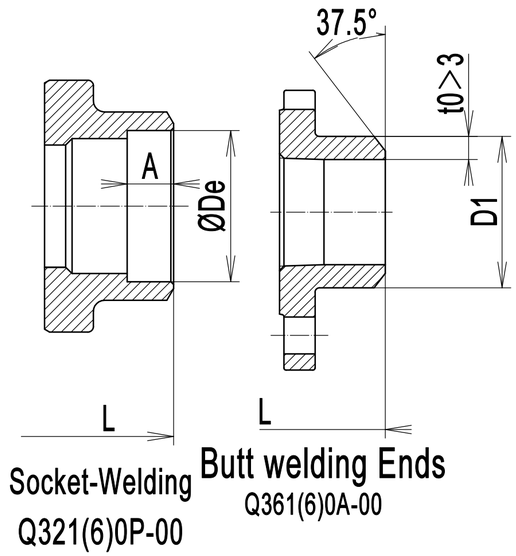

Pressure	CL400	
Valve Size	1/4"～2"	
Body Material	WCB	CF8/CF8M
Shell Test	104bar	100bar
High-pressure closure(water)	76bar	74bar
Low-pressure closure(gas)	6bar	6bar
Min. test duration	15s	

Pressure	CL300	
Valve Size	2 1/2",3",4"	
Body Material	WCB	CF8/CF8M
Shell Test	77bar	75bar
High-pressure closure(water)	57bar	55bar
Low-pressure closure(gas)	6bar	6bar
Min. test duration	60s	

DESIGN SPECIFICATION

1.Wall thickness design standard refer to factory standards;

2.Socket welding design standard：ASME B16.11

3.F2F:factory standard

4.Pressure Level：Check the specification table

5.Test standard：API598;

6.Working temperature：:-29℃～200℃

7. BW Ends: Pipe thickness as per ASME B36.10

Weld end prep as per ASME B16.25 for wall thickness above 3mm

Weld end prep as per manufacturer standard for wall thickness below 3mm

No.	Item	Qty.	Material		Remark
16	Bolt	4	A2-70		4"used 6
15	Nut	4	A2-70		4"used 6
14	Spring Washer	4	A276-304		4"used 6
13	Handle Cover	1	PVC		
12	Nut	1	A194 8		
11	Spring Washer	1	A276-304		
10	Handle	1	A240 304		
9	Packing Gland	1	A182 F304		
8	Stem Packing	1	PTFE		
7	Gasket	1	PTFE		
6	Packing Gasket	2	PTFE		
5	Seat	2	TFM1600		
4	Stem	1	A276-316		A276-304
3	Ball	1	A182-F316		A182-304
2	Cap	2	A351-CF8M	A216-WCB	A351-CF8
1	Body	1	A351-CF8M	A216-WCB	A351-CF8

Unit (Inch)

Dim.		1/4"	3/8"	1/2"	3/4"	1"	1-1/4"	1-1/2"	2"	2-1/2"	3"	4"
D		0.43	0.49	0.59	0.79	0.98	1.26	1.50	1.97	2.56	2.99	3.94
L		2.40	2.32	2.52	2.80	3.27	3.86	4.25	4.96	6.38	6.89	8.50
H		1.89	1.89	2.24	2.44	2.83	3.07	3.58	4.02	4.80	5.20	6.97
W		4.09	4.09	4.92	4.92	6.10	6.30	7.48	7.48	9.06	9.06	13.19
SW	De	0.57	0.71	0.87	1.09	1.35	1.70	1.94	2.43	2.93	3.55	4.56
SW	A	0.43	0.43	0.43	0.55	0.71	0.71	0.75	0.83	0.83	0.83	0.83
BW	D1	0.54	0.67	0.84	1.05	1.31	1.66	1.90	2.37	2.87	3.50	4.50
BW	t0-10	0.07	0.07	0.08	0.08	0.11	0.11	0.11	0.11	0.12	0.12	0.12
BW	t0-40	0.09	0.09	0.11	0.11	0.13	0.14	0.14	0.14	0.20	0.22	0.24
BW	t0-80	0.12	0.13	0.15	0.15	0.18	0.19	0.20	0.22	0.28	0.30	0.34
Weight(Kg)		0.275	0.255	0.44	0.55	0.82	1.30	2.015	3.15	7.21	10.3	21.35

Connection	Standard
BSPP	ISO 228-1
BSPT	EN 10226-2
NPT	ASME B1.20.1

Design	Li Junqing	2025.4.23	3PC Threaded(butt&socket) Ball Valve		Q311(6)0P-00
				Material	CF8M&CF8&WCB
			Revision A	Projection	Scale 1:1 Weight
Checked			GUARDIANMADE (VIETNAM) CO.,LTD		
Approved					