Drawing	Size \ Dim.	Ø1	A
90LB11106	1/8"	0.630	0.669
90LB11206	1/4"	0.748	0.768
90LB11306	3/8"	0.906	0.945
90LB11406	1/2"	1.122	1.122
90LB11506	3/4"	1.398	1.220
90LB11606	1"	1.712	1.417
90LB11706	11/4"	2.047	1.732
90LB11806	11/2"	2.323	1.909
90LB11906	2"	2.835	2.205
90LB11A06	21/2"	3.386	2.657
90LB11B06	3"	4.173	3.130
90LB11C06	4"	5.039	3.780

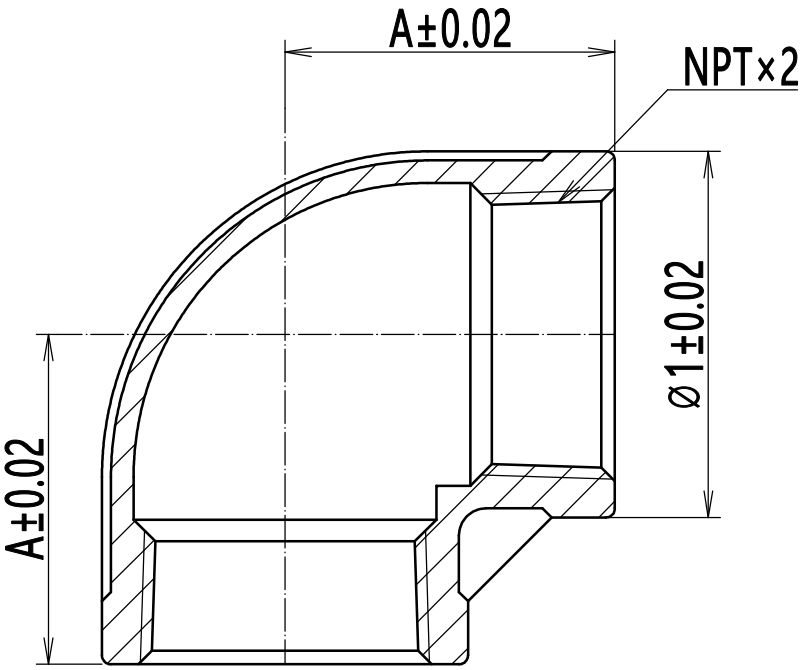

Technical Requirement

1.The material composition and quality requirements shall comply with ASTM A351 / A351M

2.Threads should be in accordance with ASME B1.20.1-1983

3.Refer to GB/ T 6414-1999 CT-6 for dimensional tolerance of product castings.

DATE 2025.7.3	DRAWN Tong He	PART NAME 90LB GDA	
TOLERANCE L:±0.02	SCALE 1.2:1	MATERIALS 304/316	
	JOB NO.	DRAWING NO. 90LB11X06	

Guardian
PROTECTING YOUR FUTURE